ETAL إيتال

2027 EDITION

SWITCHGEAR & POWER DISTRIBUTION

Products Catalogue

Engineering the core of electrical distribution, precision protection & measurement.

01 Current Transformers p. 02

02 HRC fuse & base p. 25

03 High-speed semi-conductor fuse p. 30

04 Fuse switch disconnector p. 34

05 MV Fuse p. 37

ETAL for Electrical & Mechanical Industries S.A.E.

www.etal-eg.com

Built in Egypt, **built for the grid.**

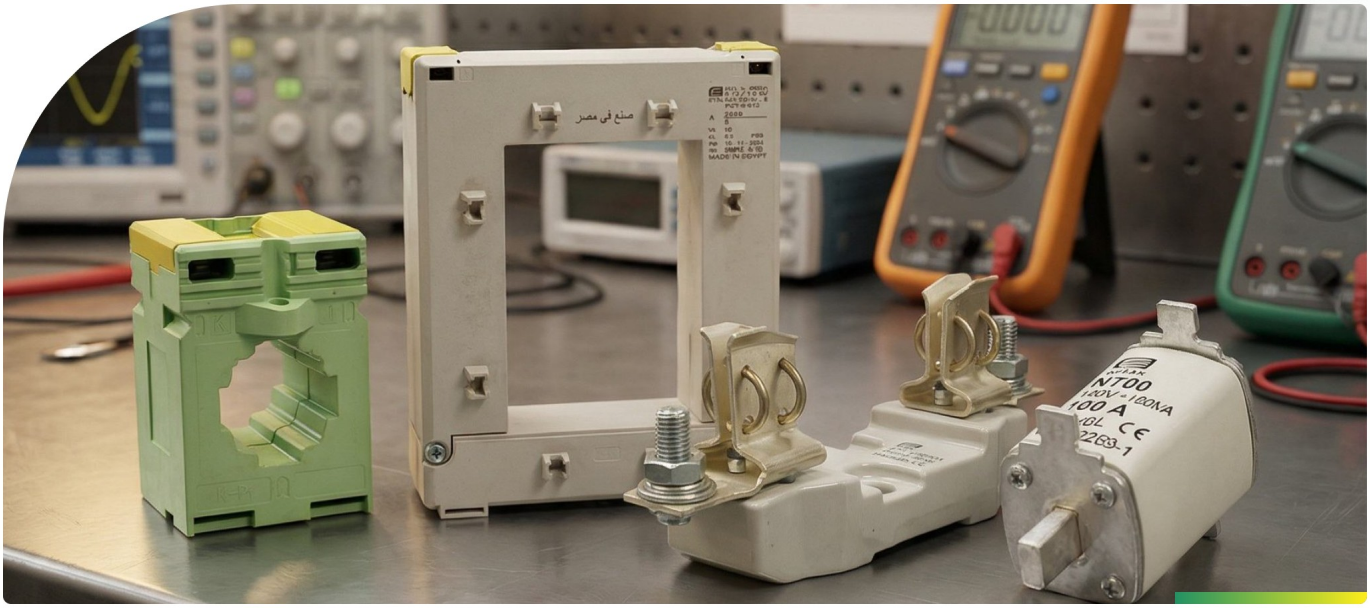

ETAL for Electrical & Mechanical Industries S.A.E. is a premier Egyptian manufacturer dedicated to the production of high-quality switchgear and power distribution solutions.

Established in 2007, ETAL was founded with a clear objective: to bridge the gap between international quality standards and local market agility. Over the last 20 years, we have evolved from a promising entrant into a powerhouse of the electrical industry.

Our manufacturing hub is located in the Fayoum Industrial Zone, spanning a facility of 4,000 m². This strategic location, just 50 km south of Cairo, allows us to maintain a massive production capacity while ensuring rapid logistical access to projects across the nation.

Our facility is equipped with advanced machinery and staffed by a dedicated team of engineers and technicians who understand that every product we ship is the heartbeat of a larger project whether industrial, commercial, or residential.

> At ETAL, we don't just sell switchgear; we provide the **power stability** that modern infrastructure requires.

2007	4,000 m²	50 km
Established	Manufacturing facility	South of Cairo · Fayoum

Current Transformers

01

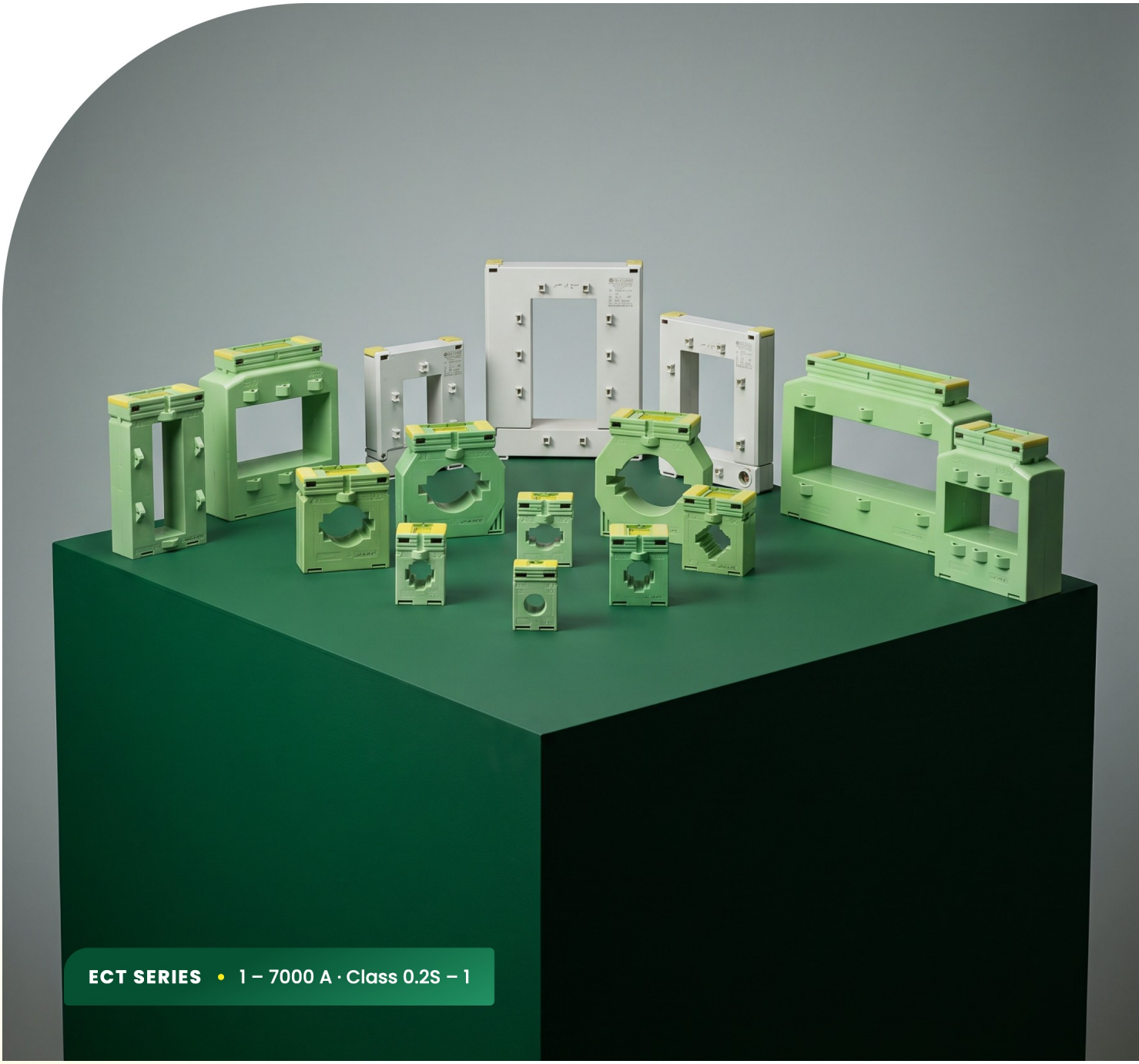

Built to international **technical norms.**

PRIMARY NOMINAL CURRENT

1 – 7000 **A**

PRECISION CLASS

0.2S – **1**

Low-voltage current transformers for industrial applications in the precision class from 0.2S to 1, with primary nominal currents of 1 – 7000 A.

Self-extinguishing housing

Current transformers are all made from breaking strength, inflammable and self-extinguishing polycarbonate welded by an ultrasonic machine.

Secondary terminals

Secondary terminal connectors made of nickel-plated brass profiles, each equipped with 2 screws.

GENERAL TECHNICAL DECLARATION

STANDARDS **IEC 60044-1 / IEC 60185 / IEC 61869**	LOCATION **Indoor installation**
OPERATING TEMPERATURE **Up to 55 °C**	MEASURING VOLTAGE **3 kV for 1 min**
MAX. ALLOWED OPERATING VOLTAGE **0.72 kV**	MEASURING FREQUENCY **50 Hz**
NOMINAL THERMAL SHORT-TIME CURRENT **> 60 In**	SECONDARY TERMINALS **Nickel-plated brass, 2 screws**

Current transformer **burden (VA)**

BURDEN VA · BY ACCURACY CLASS

≤1 | 2.5 | 3.75–5 | 7.5–10 | 15–20 | 30–45

PRIMARY CURRENT (A)	ECT-20/B			ECT-3.5			ECT-3.6			ECT-4.6			ECT-4.7			ECT-30			ECT-30/B			ECT-40		
	0.2	0.5/0.5S1		0.2	0.5/0.5S1		0.2	0.5/0.5S1		0.2	0.5/0.5S1		0.2	0.5/0.5S1		0.2	0.5/0.5S1		0.2	0.5/0.5S1		0.2	0.5/0.5S1	
5																	2.5	2.5		2.5	2.5		2.5	2.5
10																	2.5	2.5		2.5	2.5		2.5	2.5
15																	2.5	2.5		2.5	2.5		2.5	2.5
20																				2.5	5			
25																				5	5			
30																				5	10			
40																				5	10			
75								1	2.5					1	2.5									
80								1.5	2.5					1	2.5									
100								2.5	3.75					2.5	3.75									
125			1					2.5	3.75			1		2.5	3.75									
150		2.5	2.5					2.5	7.5			2.5		2.5	7.5									
160		2.5	2.5			2.5		5	7.5		1	2.5		5	7.5									
200		2.5	5			2.5	2.5	10	10		1	2.5	2.5	10	10									
250	1	2.5	5		1	2.5	2.5	10	15		2.5	5	2.5	10	15									
300					1	2.5	5	10	15		2.5	5	5	10	15									
400				1	2.5	5	5	10	15		2.5	5	5	10	15									
500				1	2.5	5	5	10	15	2.5	5	10	5	10	15									
600				2.5	5	5	5	10	15	2.5	5	10	5	10	15									
630										2.5	5	10	5	15	15									
750										2.5	5	10	5	15	30									
800										2.5	5	15	5	15	30									
1000													5	15	30									

PRIMARY CURRENT (A)	ECT-40/B			ECT-6.9			ECT-8.12			ECT-10.13			ECT-12.17			ECT-13.10			ECT-13.16			ECT-21.25		
	0.2	0.5/0.5S1		0.2	0.5/0.5S1		0.2	0.5/0.5S1		0.2	0.5/0.5S1		0.2	0.5/0.5S1		0.2	0.5/0.5S1		0.2	0.5/0.5S1		0.2	0.5/0.5S1	
5		2.5	2.5																					
10		2.5	2.5																					
15		2.5	2.5																					
20		2.5	5																					
25		5	5																					
30		5	10																					
40		5	10																					
100						2.5																		
125					1	2.5																		
150					1	2.5																		
160					1	2.5																		
200					2.5	2.5			2.5			1												
250					2.5	5			2.5			2.5												
300					2.5	5			2.5			2.5												
400				2.5	10	10		2.5	5			2.5												
500				2.5	10	15	2.5	10	10		5	5					2.5	5						
600				5	10	15	2.5	10	10	2.5	5	10		2.5	5	5	10	10						
630				5	10	15	5	10	10	2.5	5	10		2.5	5	5	10	10						
750				5	15	15	5	10	15	5	5	10	2.5	5	10	5	10	20						
800				5	15	15	5	10	15	5	10	20	5	10	20	5	10	20						
1000				5	15	30	5	15	30	5	10	20	5	10	20	5	10	20	2.5	10	15			
1200				10	15	30	10	15	30	10	15	30	10	15	30	10	15	30	2.5	10	15			
1250				10	15	30	10	15	30	10	15	30	10	15	30	10	15	30	2.5	10	15			
1500				10	15	30	10	15	30	10	15	30	10	15	30	10	15	30	10	15	30	10	15	30
1600				10	15	30	10	15	30	10	15	30	10	15	30	10	15	30	10	15	30	10	15	30
2000							10	15	30	10	15	30	10	15	30	10	15	30	10	15	30	10	15	30
2500							10	15	30	10	15	30	10	15	30	10	15	30	10	15	30	10	15	30
3200										10	15	30	10	15	30	10	15	30	10	15	30	10	15	30
3000													10	15	30	10	15	30	10	15	30	10	15	30
4000													10	15	45	10	15	45	10	15	45	10	15	45
5000																			10	15	45	10	15	45
6000																			10	15	45	10	15	45
7000																						10	15	45

Busbar guide

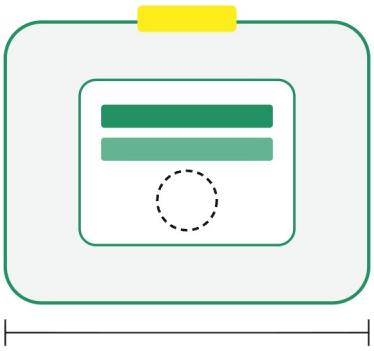

Busbar size — (number of bars) width × thickness, mm

Round conductor — max. diameter through the window, mm

Outer width — overall housing width, mm

MODEL	BUSBAR SIZE (MM)	ROUND CONDUCTOR Ø (MM)	OUTER WIDTH (MM)
ECT-20/B	—	**20**	**43**
ECT-3.5	(1) 30 × 10 (2) 20 × 10	**28**	**50**
ECT-3.6	(1) 30 × 10 (2) 20 × 10	**28**	**60**
ECT-4.6	(1) 40 × 12 (1) 32 × 18	**26**	**60**
ECT-4.7	(1) 40 × 10 (2) 30 × 10	**32**	**70**
ECT-6.9	(1) 60 × 10 (2) 50 × 10	**44**	**94**
ECT-8.12	(1) 80 × 10 (2) 60 × 10	**55**	**119**
ECT-10.13	(1) 100 × 10 (1) 80 × 10	**79**	**127**
ECT-12.17	(5) 100 × 10	—	**127**
ECT-13.10	(3) 125 × 10	—	**98**
ECT-13.16	(7) 125 × 10	—	**157**
ECT-21.25	[2] (7) 125 × 10	—	**250**

ECT-20/B

PRIMARY CURRENT	SECONDARY	ROUND CONDUCTOR	OUTER WIDTH
125 – 250 A	5 A · 1 A	Ø 20 mm	43 mm

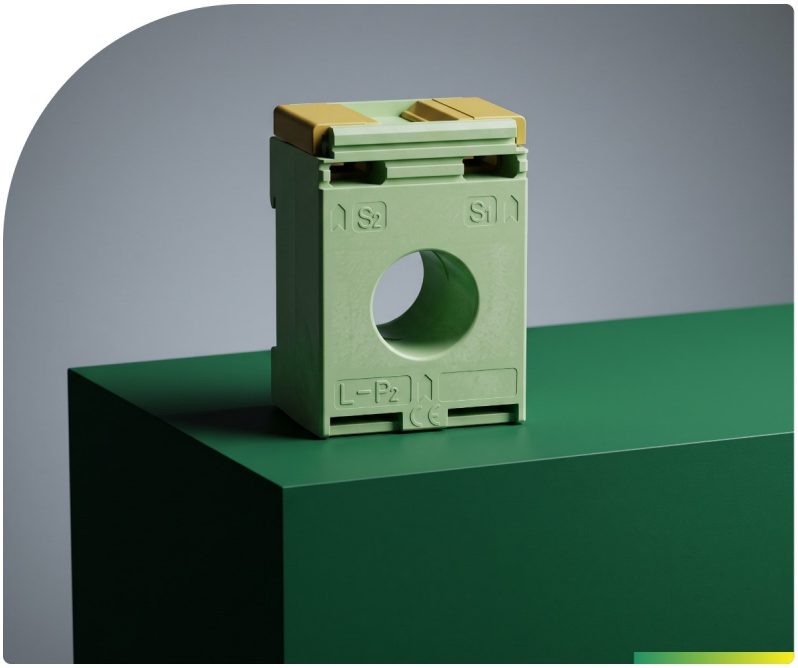

DIMENSIONS · MM

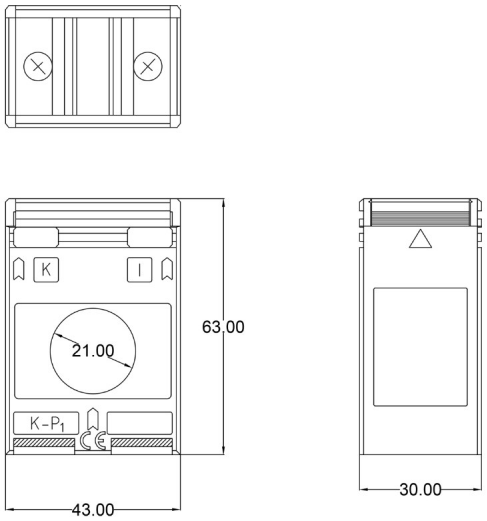

BURDEN (VA) — ≤1 | 2.5 | 3.75–5 | 7.5–10 | 15–20 | 30–45

PRIMARY CURRENT (A)	Class 0.2		Class 0.5/0.5S		Class 1	
	5 A	1 A	5 A	1 A	5 A	1 A
125	·	·	·	·	1	1
150	·	·	2.5	2.5	2.5	2.5
160	·	·	2.5	2.5	2.5	2.5
200	·	·	2.5	2.5	5	5
250	1	1	2.5	2.5	5	5

ECT-3.5

Busbar: (1) 30 × 10 / (2) 20 × 10 mm

PRIMARY CURRENT	SECONDARY	ROUND CONDUCTOR	OUTER WIDTH
160 – 600 A	5 A · 1 A	Ø 28 mm	50 mm



DIMENSIONS · MM

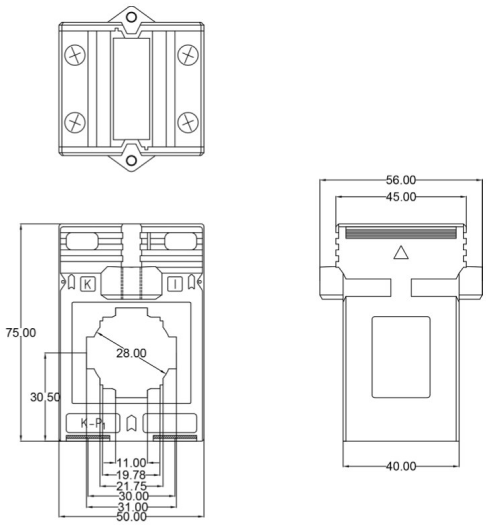

BURDEN (VA) — ≤1 | 2.5 | 3.75–5 | 7.5–10 | 15–20 | 30–45

PRIMARY CURRENT (A)	Class 0.2		Class 0.5/0.5S		Class 1	
	5 A	1 A	5 A	1 A	5 A	1 A
160	·	·	·	·	2.5	2.5
200	·	·	·	·	2.5	2.5
250	·	·	1	1	2.5	2.5
300	·	·	1	1	2.5	2.5
400	1	1	2.5	2.5	5	5
500	1	1	2.5	2.5	5	5
600	2.5	2.5	5	5	5	5

ECT-3.6

Busbar: (1) 30 × 10 / (2) 20 × 10 mm

PRIMARY CURRENT	SECONDARY	ROUND CONDUCTOR	OUTER WIDTH
75 – 600 A	5 A · 1 A	Ø 28 mm	60 mm



DIMENSIONS · MM

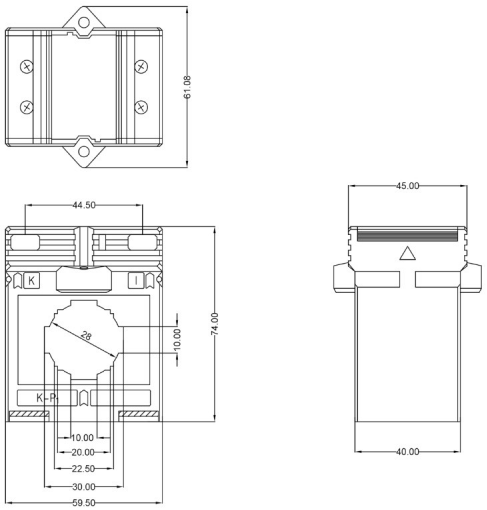

BURDEN (VA) — ≤1 | 2.5 | 3.75–5 | 7.5–10 | 15–20 | 30–45

PRIMARY CURRENT (A)	Class 0.2		Class 0.5/0.5S		Class 1	
	5 A	1 A	5 A	1 A	5 A	1 A
75	·	·	1	1	2.5	2.5
80	·	·	1.5	1.5	2.5	2.5
100	·	·	2.5	2.5	3.75	3.75
125	·	·	2.5	2.5	3.75	3.75
150	·	·	2.5	2.5	7.5	7.5
160	·	·	5	5	7.5	7.5
200	2.5	2.5	10	10	10	10
250	2.5	2.5	10	10	15	15
300	5	5	10	10	15	15
400	5	5	10	10	15	15
500	5	5	10	10	15	15
600	5	5	10	10	15	15

ECT-4.6

Busbar: (1) 40 × 12 / (1) 32 × 18 mm

PRIMARY CURRENT	SECONDARY	ROUND CONDUCTOR	OUTER WIDTH
125 – 800 A	5 A · 1 A	Ø 26 mm	60 mm

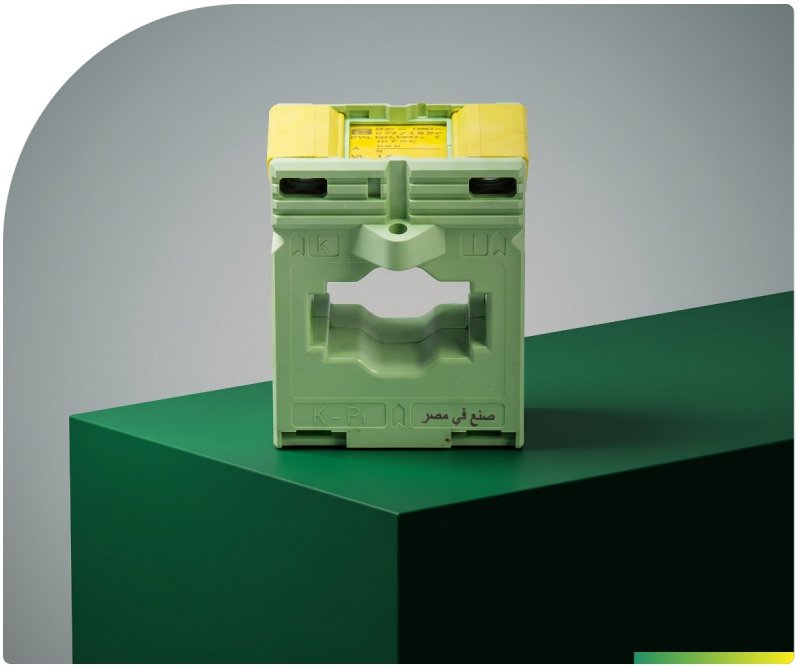

DIMENSIONS · MM

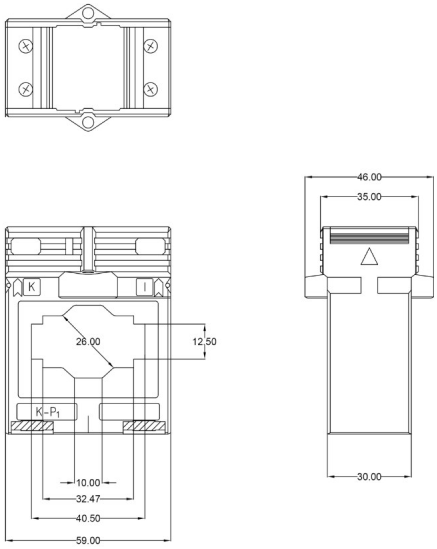

BURDEN (VA) — ≤1 | 2.5 | 3.75–5 | 7.5–10 | 15–20 | 30–45

PRIMARY CURRENT (A)	Class 0.2		Class 0.5/0.5S		Class 1	
	5 A	1 A	5 A	1 A	5 A	1 A
125	·	·	·	·	1	1
150	·	·	·	·	2.5	2.5
160	·	·	1	1	2.5	2.5
200	·	·	1	1	2.5	2.5
250	·	·	2.5	2.5	5	5
300	·	·	2.5	2.5	5	5
400	·	·	2.5	2.5	5	5
500	2.5	2.5	5	5	10	10
600	2.5	2.5	5	5	10	10
630	2.5	2.5	5	5	10	10
750	2.5	2.5	5	5	10	10
800	2.5	2.5	5	5	15	15

ECT-4.7

Busbar: (1) 40 × 10 / (2) 30 × 10 mm

PRIMARY CURRENT	SECONDARY	ROUND CONDUCTOR	OUTER WIDTH
75 – 1000 A	5 A · 1 A	Ø 32 mm	70 mm



DIMENSIONS · MM

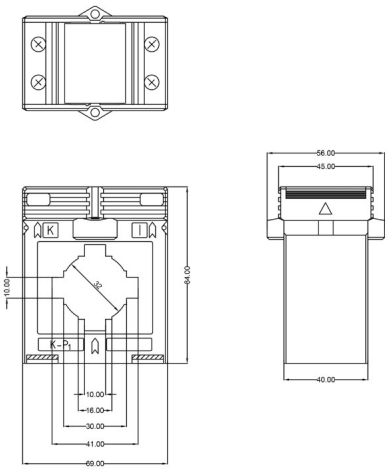

BURDEN (VA) — ≤1 | 2.5 | 3.75–5 | 7.5–10 | 15–20 | 30–45

PRIMARY CURRENT (A)	Class 0.2		Class 0.5/0.5S		Class 1	
	5 A	1 A	5 A	1 A	5 A	1 A
75	·	·	1	1	2.5	2.5
80	·	·	1	1	2.5	2.5
100	·	·	2.5	2.5	3.75	3.75
125	·	·	2.5	2.5	3.75	3.75
150	·	·	2.5	2.5	7.5	7.5
160	·	·	5	5	7.5	7.5
200	2.5	2.5	10	10	10	10
250	2.5	2.5	10	10	15	15
300	5	5	10	10	15	15
400	5	5	10	10	15	15
500	5	5	10	10	15	15
600	5	5	10	10	15	15
630	5	5	15	15	15	15
750	5	5	15	15	30	30
800	5	5	15	15	30	30
1000	5	5	15	15	30	30

ECT-30

PRIMARY CURRENT	SECONDARY	ACCURACY CLASS
5 – 15 A	5 A · 1 A	0.5/0.5S · 1

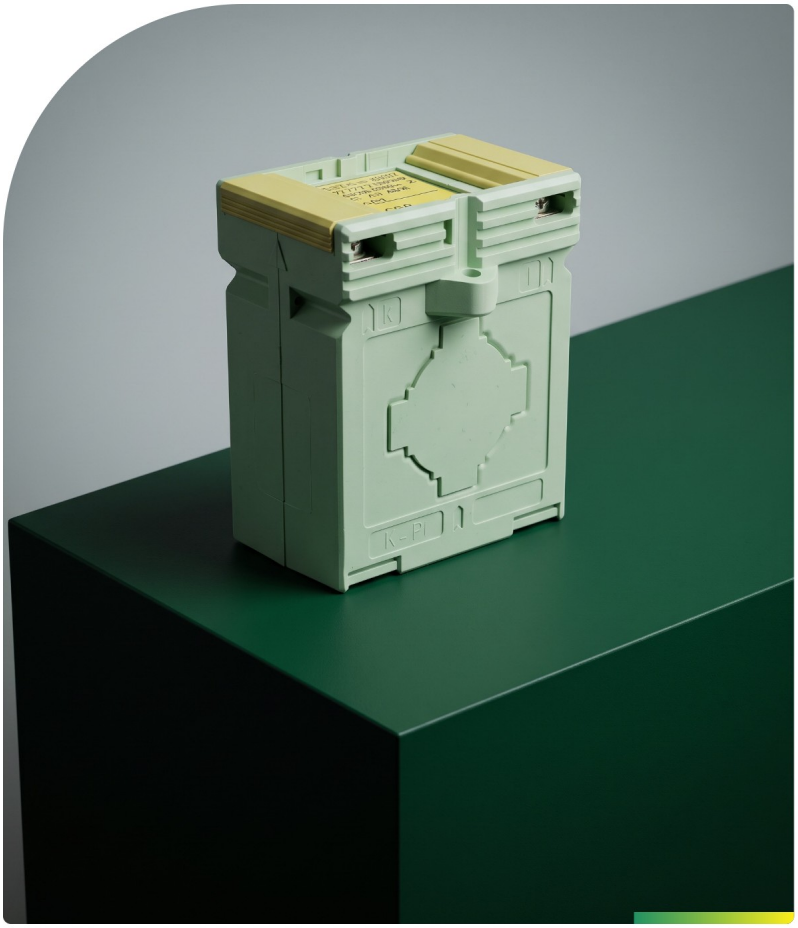

DIMENSIONS · MM

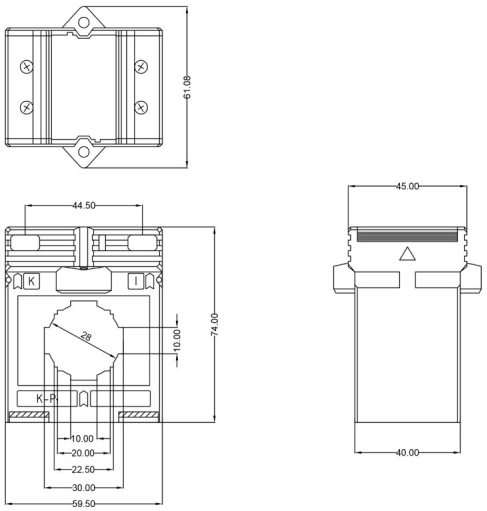

BURDEN (VA)

≤1 | 2.5 | 3.75–5 | 7.5–10 | 15–20 | 30–45

PRIMARY CURRENT (A)	Class 0.2		Class 0.5/0.5S		Class 1	
	5 A	1 A	5 A	1 A	5 A	1 A
5	·	·	2.5	2.5	2.5	2.5
10	·	·	2.5	2.5	2.5	2.5
15	·	·	2.5	2.5	2.5	2.5

ECT-30/B

PRIMARY CURRENT	SECONDARY	ACCURACY CLASS
5 – 40 A	5 A · 1 A	0.5/0.5S · 1



DIMENSIONS · MM

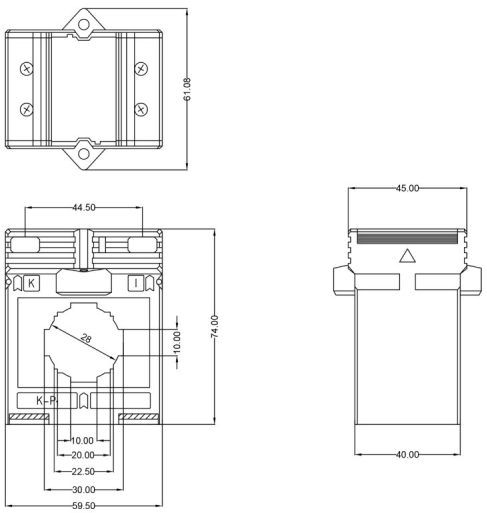

BURDEN (VA)

≤1 | 2.5 | 3.75–5 | 7.5–10 | 15–20 | 30–45

PRIMARY CURRENT (A)	Class 0.2		Class 0.5/0.5S		Class 1	
	5 A	1 A	5 A	1 A	5 A	1 A
5	·	·	2.5	2.5	2.5	2.5
10	·	·	2.5	2.5	2.5	2.5
15	·	·	2.5	2.5	2.5	2.5
20	·	·	2.5	2.5	5	5
25	·	·	5	5	5	5
30	·	·	5	5	10	10
40	·	·	5	5	10	10

ECT-40

PRIMARY CURRENT	SECONDARY	ACCURACY CLASS
5 – 15 A	5 A · 1 A	0.5/0.5S · 1

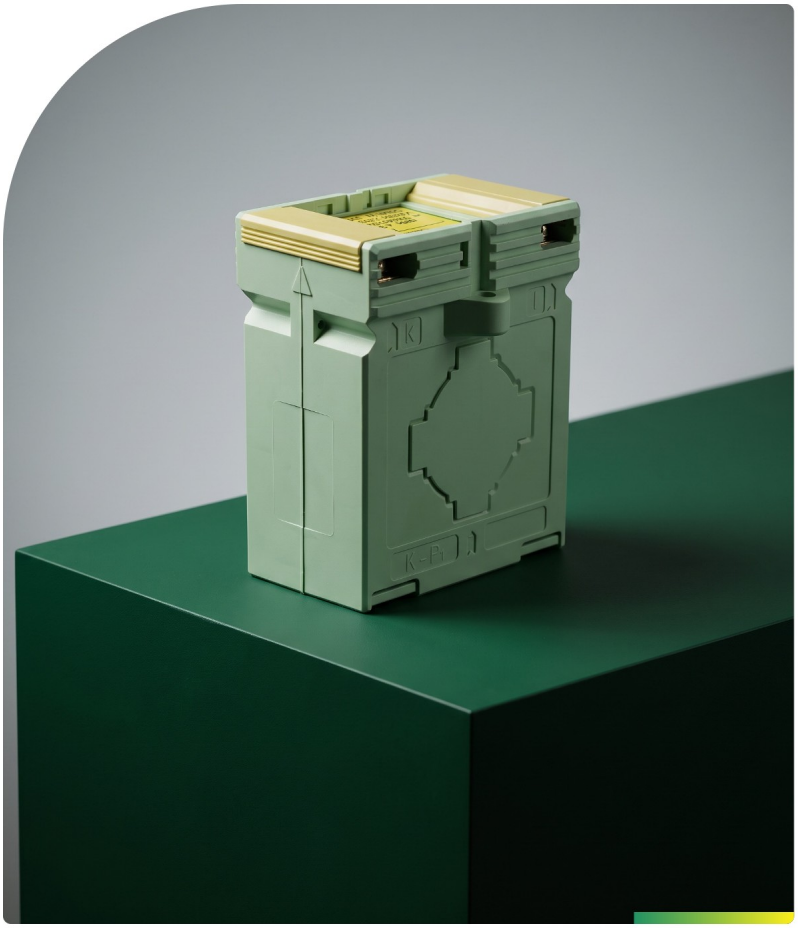

DIMENSIONS · MM

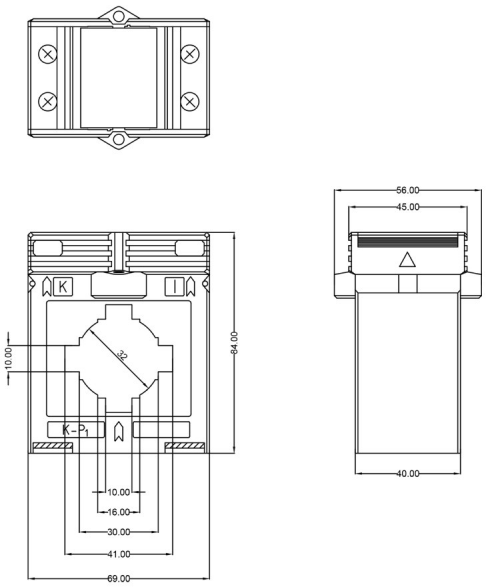

BURDEN (VA)

≤1 | 2.5 | 3.75–5 | 7.5–10 | 15–20 | 30–45

PRIMARY CURRENT (A)	Class 0.2		Class 0.5/0.5S		Class 1	
	5 A	1 A	5 A	1 A	5 A	1 A
5	·	·	2.5	2.5	2.5	2.5
10	·	·	2.5	2.5	2.5	2.5
15	·	·	2.5	2.5	2.5	2.5

ECT-40/B

PRIMARY CURRENT	SECONDARY	ACCURACY CLASS
5 – 40 A	5 A · 1 A	0.5/0.5S · 1



DIMENSIONS · MM

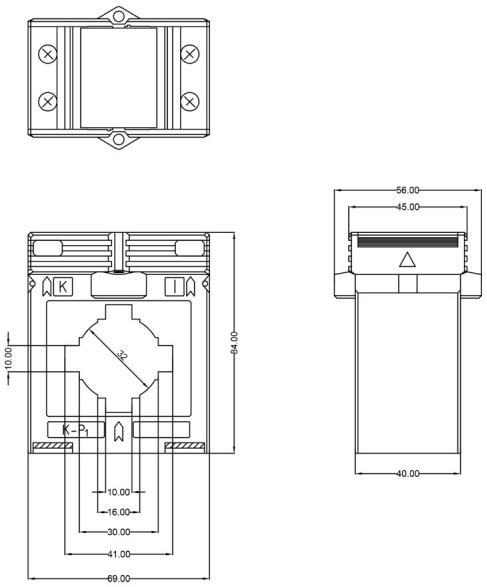

BURDEN (VA)

≤1 | 2.5 | 3.75–5 | 7.5–10 | 15–20 | 30–45

PRIMARY CURRENT (A)	Class 0.2		Class 0.5/0.5S		Class 1	
	5 A	1 A	5 A	1 A	5 A	1 A
5	·	·	2.5	2.5	2.5	2.5
10	·	·	2.5	2.5	2.5	2.5
15	·	·	2.5	2.5	2.5	2.5
20	·	·	2.5	2.5	5	5
25	·	·	5	5	5	5
30	·	·	5	5	10	10
40	·	·	5	5	10	10

ECT-6.9

Busbar: (1) 60 × 10 / (2) 50 × 10 mm

PRIMARY CURRENT	SECONDARY	ROUND CONDUCTOR	OUTER WIDTH
100 – 1600 A	5 A · 1 A	Ø 44 mm	94 mm

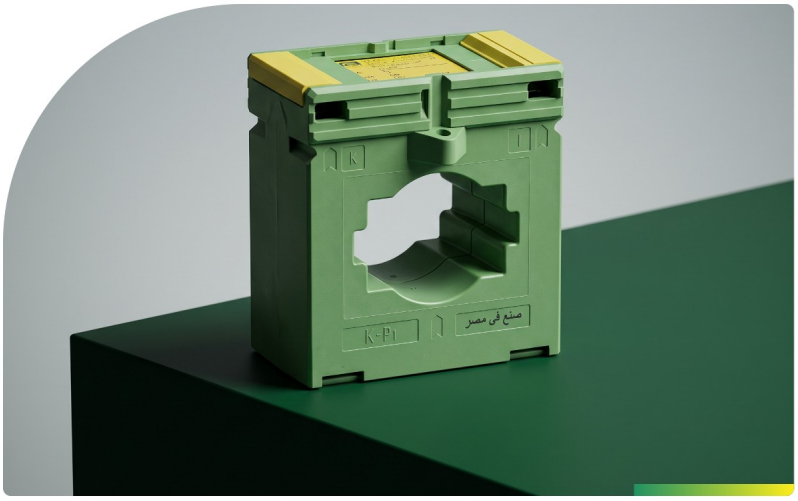

DIMENSIONS · MM

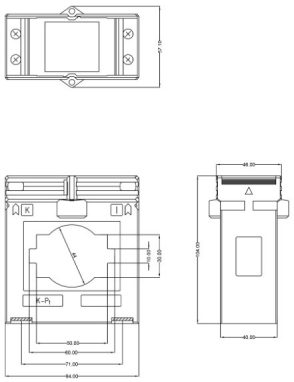

BURDEN (VA) — ≤1 | 2.5 | 3.75–5 | 7.5–10 | 15–20 | 30–45

PRIMARY CURRENT (A)	Class 0.2		Class 0.5/0.5S		Class 1	
	5 A	1 A	5 A	1 A	5 A	1 A
100	·	·	·	·	2.5	2.5
125	·	·	1	1	2.5	2.5
150	·	·	1	1	2.5	2.5
160	·	·	1	1	2.5	2.5
200	·	·	2.5	2.5	2.5	2.5
250	·	·	2.5	2.5	5	5
300	·	·	2.5	2.5	5	5
400	2.5	2.5	10	10	10	10
500	2.5	2.5	10	10	15	15
600	5	5	10	10	15	15
630	5	5	10	10	15	15
750	5	5	15	15	15	15
800	5	5	15	15	15	15
1000	5	5	15	15	30	30
1200	10	10	15	15	30	30
1250	10	10	15	15	30	30
1500	10	10	15	15	30	30
1600	10	10	15	15	30	30

ECT-8.12

Busbar: (1) 80 × 10 / (2) 60 × 10 mm

PRIMARY CURRENT	SECONDARY	ROUND CONDUCTOR	OUTER WIDTH
200 – 2500 A	5 A · 1 A	Ø 55 mm	119 mm

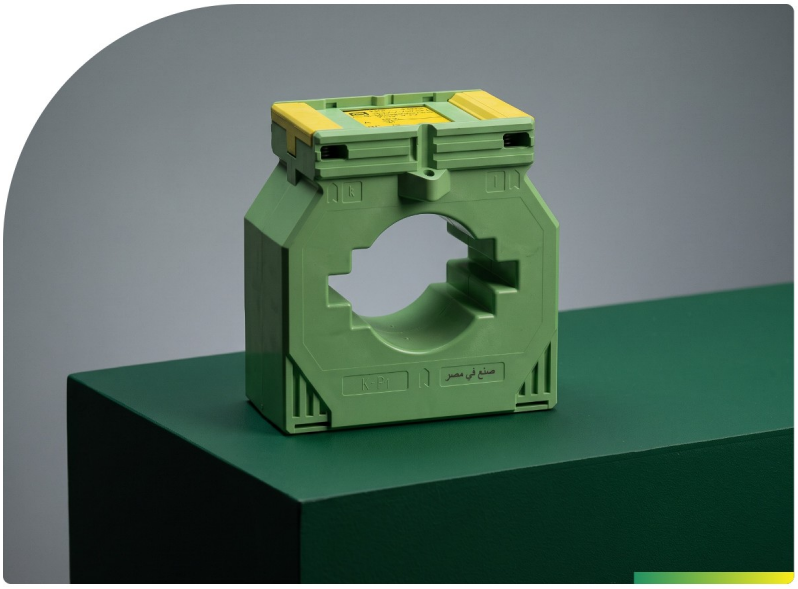

DIMENSIONS · MM

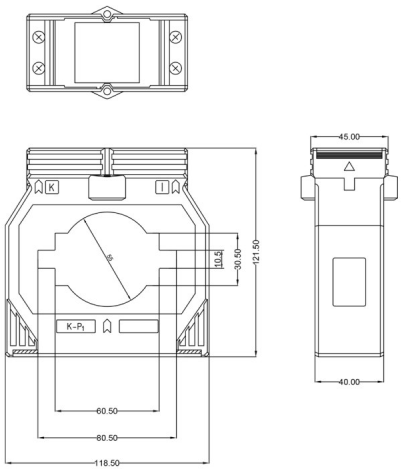

BURDEN (VA) — ≤1 | 2.5 | 3.75–5 | 7.5–10 | 15–20 | 30–45

PRIMARY CURRENT (A)	Class 0.2		Class 0.5/0.5S		Class 1	
	5 A	1 A	5 A	1 A	5 A	1 A
200	·	·	·	·	2.5	2.5
250	·	·	·	·	2.5	2.5
300	·	·	·	·	2.5	2.5
400	·	·	2.5	2.5	5	5
500	2.5	2.5	10	10	10	10
600	2.5	2.5	10	10	10	10
630	5	5	10	10	10	10
750	5	5	10	10	15	15
800	5	5	10	10	15	15
1000	5	5	15	15	30	30
1200	10	10	15	15	30	30
1250	10	10	15	15	30	30
1500	10	10	15	15	30	30
1600	10	10	15	15	30	30
2000	10	10	15	15	30	30
2500	10	10	15	15	30	30

ECT-10.13

Busbar: (1) 100 × 10 / (1) 80 × 10 mm

PRIMARY CURRENT	SECONDARY	ROUND CONDUCTOR	OUTER WIDTH
200 – 3200 A	5 A · 1 A	Ø 79 mm	127 mm

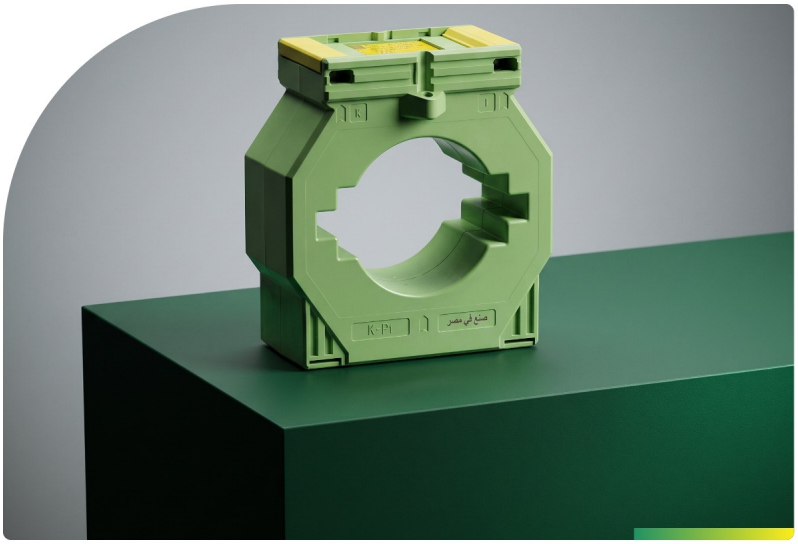

DIMENSIONS · MM

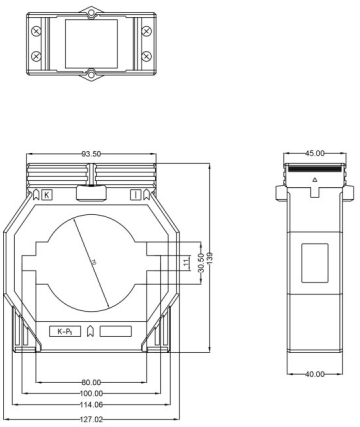

BURDEN (VA) — ≤1 | 2.5 | 3.75–5 | 7.5–10 | 15–20 | 30–45

PRIMARY CURRENT (A)	Class 0.2		Class 0.5/0.5S		Class 1	
	5 A	1 A	5 A	1 A	5 A	1 A
200	·	·	·	·	1	1
250	·	·	·	·	2.5	2.5
300	·	·	·	·	2.5	2.5
400	·	·	·	·	2.5	2.5
500	·	·	5	5	5	5
600	2.5	2.5	5	5	10	10
630	2.5	2.5	5	5	10	10
750	5	5	5	5	10	10
800	5	5	10	10	20	20
1000	5	5	10	10	20	20
1200	10	10	15	15	30	30
1250	10	10	15	15	30	30
1500	10	10	15	15	30	30
1600	10	10	15	15	30	30
2000	10	10	15	15	30	30
2500	10	10	15	15	30	30
3200	10	10	15	15	30	30

ECT-12.17

Busbar: (5) 100 × 10 mm

PRIMARY CURRENT	SECONDARY	ROUND CONDUCTOR	OUTER WIDTH
600 – 4000 A	5 A · 1 A	—	127 mm

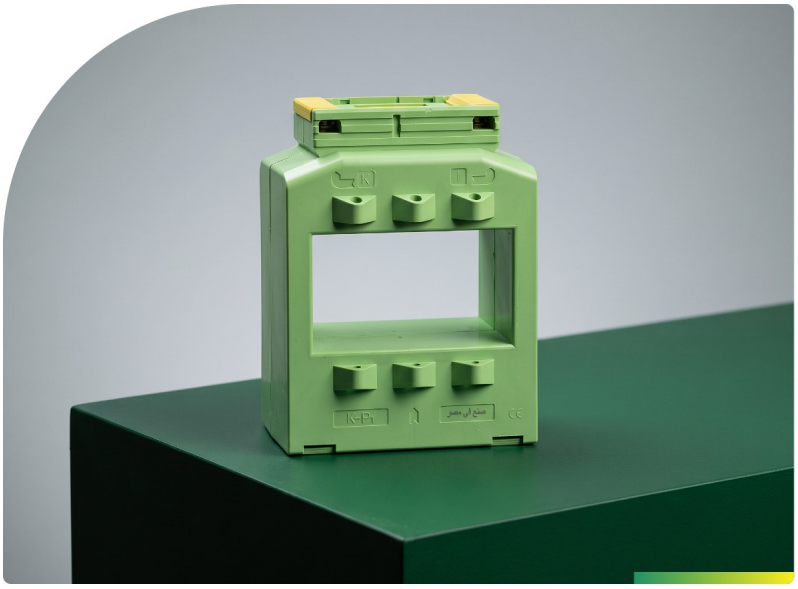

DIMENSIONS · MM

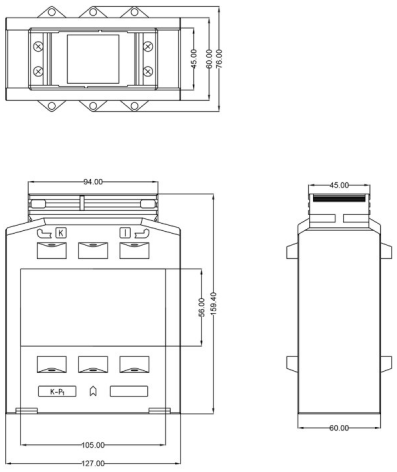

BURDEN (VA) — ≤1 | 2.5 | 3.75–5 | 7.5–10 | 15–20 | 30–45

PRIMARY CURRENT (A)	Class 0.2		Class 0.5/0.5S		Class 1	
	5 A	1 A	5 A	1 A	5 A	1 A
600	·	·	2.5	2.5	5	5
630	·	·	2.5	2.5	5	5
750	2.5	2.5	5	5	10	10
800	5	5	10	10	20	20
1000	5	5	10	10	20	20
1200	10	10	15	15	30	30
1250	10	10	15	15	30	30
1500	10	10	15	15	30	30
1600	10	10	15	15	30	30
2000	10	10	15	15	30	30
2500	10	10	15	15	30	30
3200	10	10	15	15	30	30
3000	10	10	15	15	30	30
4000	10	10	15	15	45	45

ECT-13.10

Busbar: (3) 125 × 10 mm

PRIMARY CURRENT	SECONDARY	ROUND CONDUCTOR	OUTER WIDTH
500 – 4000 A	5 A · 1 A	—	98 mm

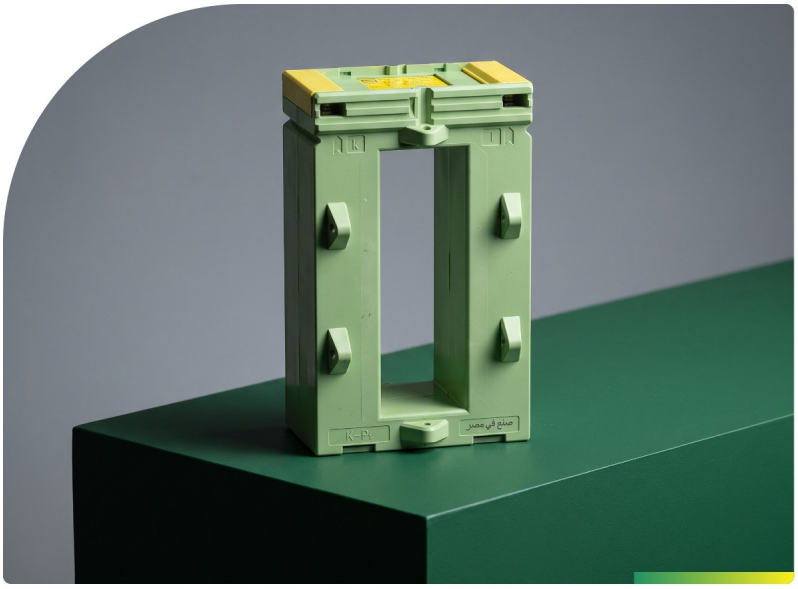

DIMENSIONS · MM

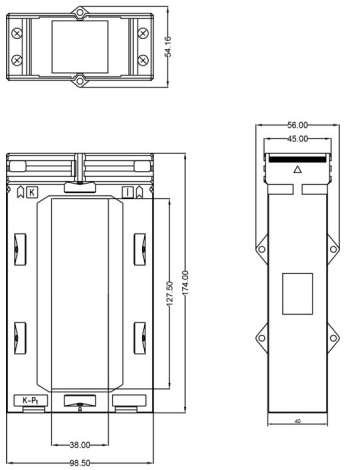

BURDEN (VA) — ≤1 | 2.5 | 3.75–5 | 7.5–10 | 15–20 | 30–45

PRIMARY CURRENT (A)	Class 0.2		Class 0.5/0.5S		Class 1	
	5 A	1 A	5 A	1 A	5 A	1 A
500	·	·	2.5	2.5	5	5
600	5	5	10	10	10	10
630	5	5	10	10	10	10
750	5	5	10	10	20	20
800	5	5	10	10	20	20
1000	5	5	10	10	20	20
1200	10	10	15	15	30	30
1250	10	10	15	15	30	30
1500	10	10	15	15	30	30
1600	10	10	15	15	30	30
2000	10	10	15	15	30	30
2500	10	10	15	15	30	30
3200	10	10	15	15	30	30
3000	10	10	15	15	30	30
4000	10	10	15	15	45	45

ECT-13.16

Busbar: (7) 125 × 10 mm

PRIMARY CURRENT	SECONDARY	ROUND CONDUCTOR	OUTER WIDTH
1000 – 6000 A	5 A · 1 A	—	157 mm



DIMENSIONS · MM

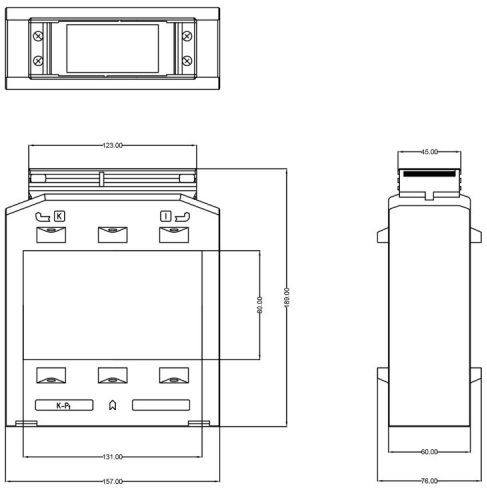

BURDEN (VA) ≤1 | 2.5 | 3.75–5 | 7.5–10 | 15–20 | 30–45

PRIMARY CURRENT (A)	Class 0.2		Class 0.5/0.5S		Class 1	
	5 A	1 A	5 A	1 A	5 A	1 A
1000	2.5	2.5	10	10	15	15
1200	2.5	2.5	10	10	15	15
1250	2.5	2.5	10	10	15	15
1500	10	10	15	15	30	30
1600	10	10	15	15	30	30
2000	10	10	15	15	30	30
2500	10	10	15	15	30	30
3200	10	10	15	15	30	30
3000	10	10	15	15	30	30
4000	10	10	15	15	45	45
5000	10	10	15	15	45	45
6000	10	10	15	15	45	45

ECT-21.25

Busbar: [2] (7) 125 × 10 mm

PRIMARY CURRENT	SECONDARY	ROUND CONDUCTOR	OUTER WIDTH
1500 – 7000 A	5 A · 1 A	—	250 mm

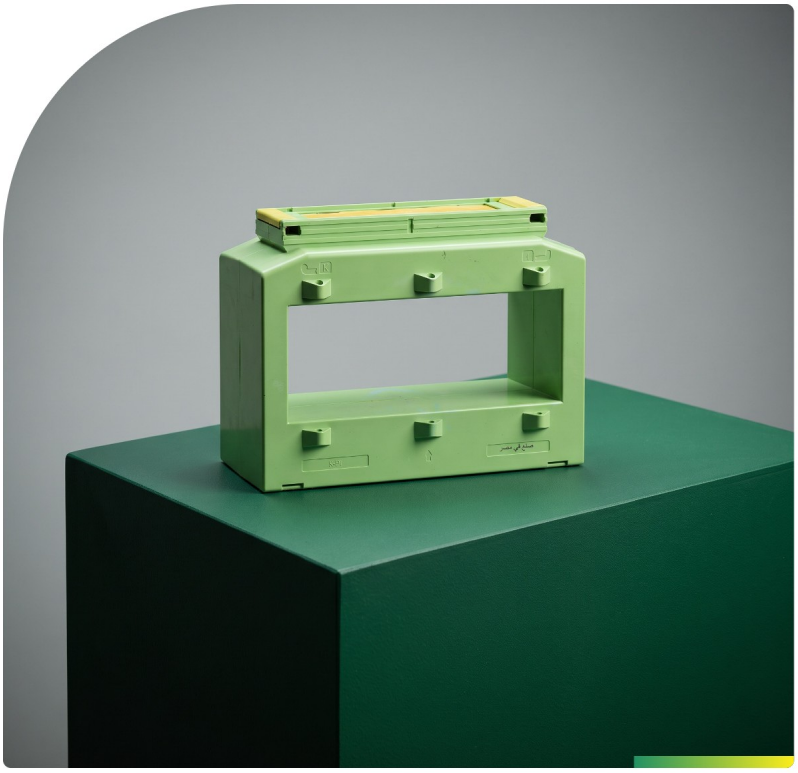

DIMENSIONS · MM

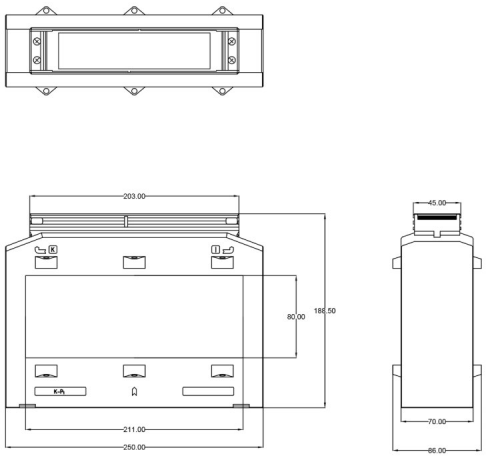

BURDEN (VA) — ≤1 | 2.5 | 3.75–5 | 7.5–10 | 15–20 | 30–45

PRIMARY CURRENT (A)	Class 0.2		Class 0.5/0.5S		Class 1	
	5 A	1 A	5 A	1 A	5 A	1 A
1500	10	10	15	15	30	30
1600	10	10	15	15	30	30
2000	10	10	15	15	30	30
2500	10	10	15	15	30	30
3200	10	10	15	15	30	30
3000	10	10	15	15	30	30
4000	10	10	15	15	45	45
5000	10	10	15	15	45	45
6000	10	10	15	15	45	45
7000	10	10	15	15	45	45

ECT-S-58

PRIMARY CURRENT	SECONDARY	ACCURACY CLASS
250 – 1200 A	5 A · 1 A	0.2 · 0.5/0.5S · 1

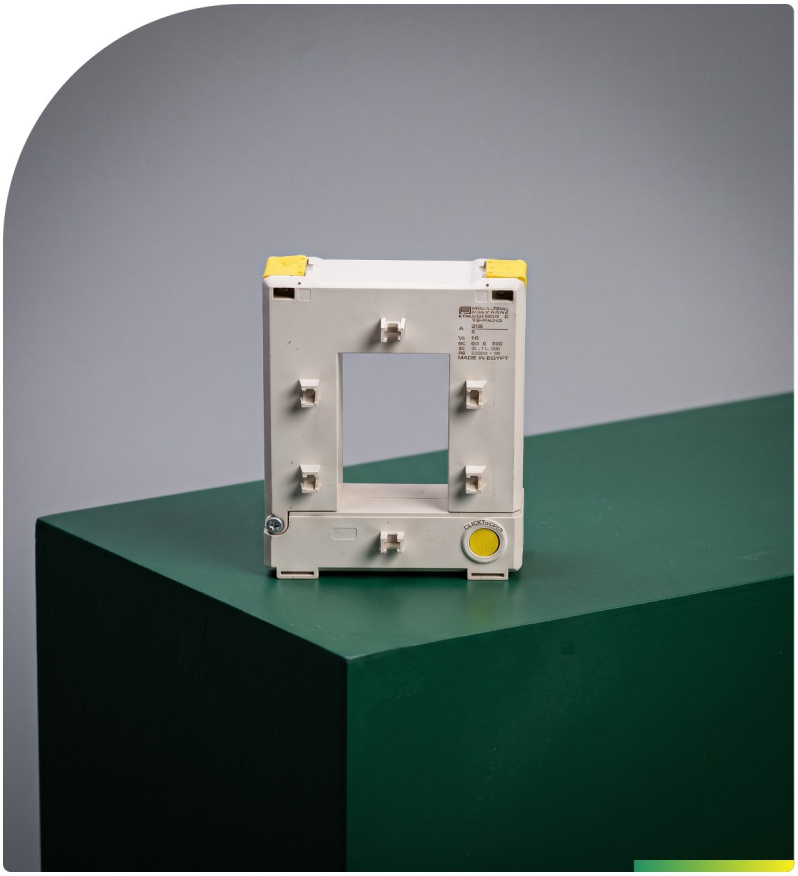

DIMENSIONS · MM

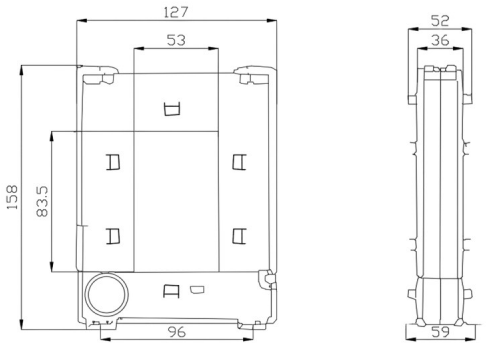

BURDEN (VA) — ≤1 | 2.5 | 3.75–5 | 7.5–10 | 15–20 | 30–45

PRIMARY CURRENT (A)	Class 0.2		Class 0.5/0.5S		Class 1	
	5 A	1 A	5 A	1 A	5 A	1 A
250	·	·	·	·	2.5	2.5
300	·	·	2.5	2.5	5	5
400	·	·	5	5	5	5
500	2.5	2.5	5	5	5	5
600	2.5	2.5	5	5	10	10
800	5	5	10	10	10	10
1000	5	5	10	10	10	10
1200	5	5	10	10	10	10

ECT-S-812

PRIMARY CURRENT	SECONDARY	ACCURACY CLASS
500 – 2500 A	5 A · 1 A	0.2 · 0.5/0.5S · 1



DIMENSIONS · MM

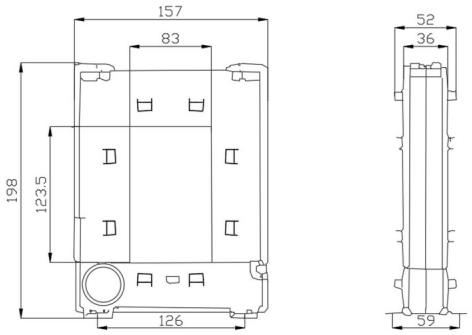

BURDEN (VA) ≤1 | 2.5 | 3.75–5 | 7.5–10 | 15–20 | 30–45

PRIMARY CURRENT (A)	Class 0.2		Class 0.5/0.5S		Class 1	
	5 A	1 A	5 A	1 A	5 A	1 A
500	·	·	2.5	2.5	5	5
600	·	·	2.5	2.5	5	5
800	2.5	2.5	5	5	5	5
1000	2.5	2.5	10	10	10	10
1200	5	5	10	10	10	10
1500	5	5	10	10	10	10
1600	10	10	10	10	10	10
2000	10	10	15	15	15	15
2500	10	10	15	15	15	15

ECT-S-816

PRIMARY CURRENT	SECONDARY	ACCURACY CLASS
1000 – 7000 A	5 A · 1 A	0.2 · 0.5/0.5S · 1



DIMENSIONS · MM

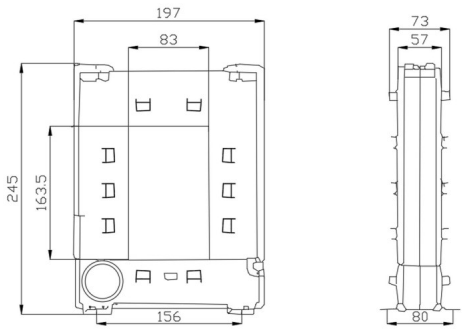

BURDEN (VA)

≤1 | 2.5 | 3.75–5 | 7.5–10 | 15–20 | 25–45

PRIMARY CURRENT (A)	Class 0.2		Class 0.5/0.5S		Class 1	
	5 A	1 A	5 A	1 A	5 A	1 A
1000	2.5	2.5	10	10	15	15
1200	5	5	10	10	15	15
1500	5	5	10	10	15	15
1600	5	5	10	10	20	20
2000	5	5	15	15	25	25
2500	10	10	15	15	30	30
3000	10	10	15	15	30	30
4000	10	10	15	15	30	30
5000	10	10	15	15	30	30
6000	10	10	15	15	30	30
7000	10	10	15	15	30	30

HRC fuse & base

02

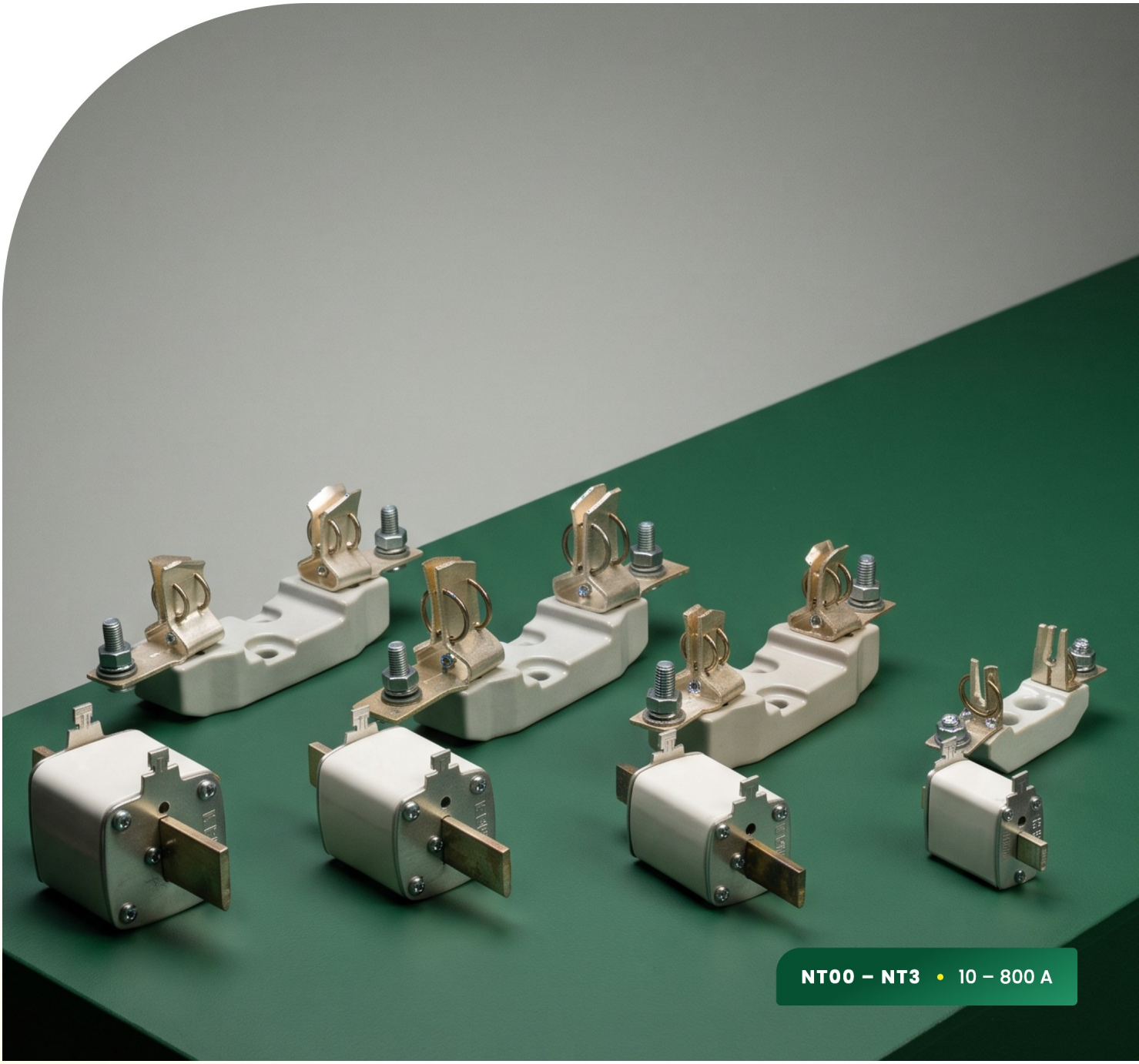

Fuse links NT

Selection chart for blade-type fuse links.

SIZE	PART NO.	RATING	RATED WATT LOSS (W)	TYPE NT
 **Size 00** Limit (IS 13703): 100 A fuse · 6.5 W	NT00GL 69HR10	10 A	1.1	100, 125, 160
	NT00GL 69HR16	16 A	2.4	100, 125, 160
	NT00GL 69HR20	20 A	2.4	100, 125, 160
	NT00GL 69HR25	25 A	3.2	100, 125, 160
	NT00GL 69HR32	32 A	5	100, 125, 160
	NT00GL 69HR40	40 A	5	100, 125, 160
	NT00GL 69HR50	50 A	5	100, 125, 160
	NT00GL 69HR63	63 A	5.3	100, 125, 160
	NT00GL 69HR80	80 A	6.2	100, 125, 160
	NT00GL 69HR100	100 A	7	100, 125, 160
	NT00GL 69HR125	125 A	8.5	100, 125, 160
	NT00GL 69HR160	160 A	12	100, 125, 160
 **Size 1** Limit (IS 13703): 250 A fuse · 34 W	NT1GL 69HR63	63 A	5.7	100, 125, 160
	NT1GL 69HR80	80 A	8.3	200
	NT1GL 69HR100	100 A	9.1	200, 250, 315
	NT1GL 69HR125	125 A	10.3	200, 250, 315
	NT1GL 69HR160	160 A	12.3	250, 315
	NT1GL 69HR200	200 A	14.3	250, 315
	NT1GL 69HR250	250 A	17.3	250, 315
 **Size 2** Limit (IS 13703): 400 A fuse · 34 W	NT2GL 69HR200	200 A	14.1	400
	NT2GL 69HR250	250 A	16.9	400
	NT2GL 69HR315	315 A	20.2	400
	NT2GL 69HR400	400 A	24.9	400
 **Size 3** Limit (IS 13703): 630 A fuse · 48 W	NT3GL 69HR315	315 A	20.5	630, 800
	NT3GL 69HR400	400 A	26.7	630, 800
	NT3GL 69HR630	630 A	42.2	630, 800
	NT3GL 69HR800	800 A	48	800

GUIDELINES FOR SELECTION

1. Fuse links type NT are suitable for system voltages up to 415 V+.
2. Select the size and rating of fuse link for the switch-disconnector fuse unit as per this selection chart.
3. Ensure the breaking capacity of the fuse link is higher than the prospective fault current.
4. Select fuses so that discrimination is achieved with other protective devices in the system.

Fuse link **dimensions**

All dimensions in mm.









SIZE 00

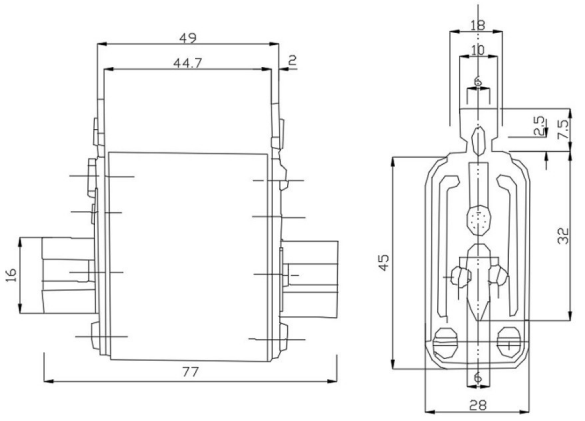

SIZE 1 · 2 · 3

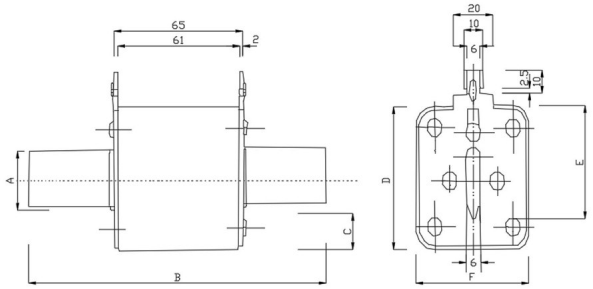

SIZES 1 · 2 · 3 — DIMENSIONS A–F AND WEIGHT

Type	A	B	C	D	E	F	Weight (kg)
Size 1	20	135	12	48	38	48	**0.390**
Size 2	25	147.5	14	58	45	58	**0.570**
Size 3	32	147.5	17	66	50	66	**0.760**

Characteristic **curves**

HRC fuse links type NT.

TIME–CURRENT

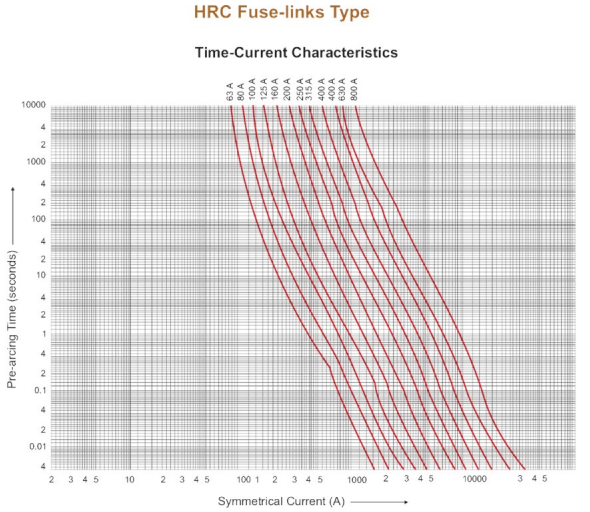

CUT-OFF CURRENT

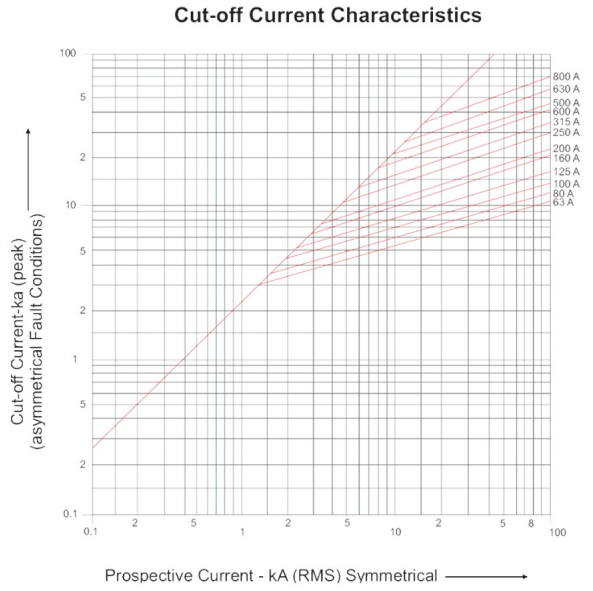

I²T CHARACTERISTICS

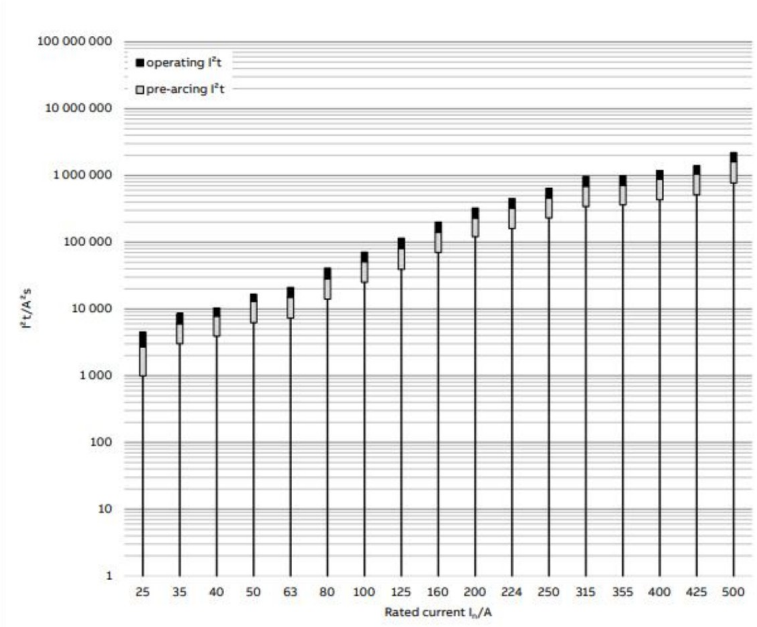

Fuse **bases**

All dimensions in mm.









NT00

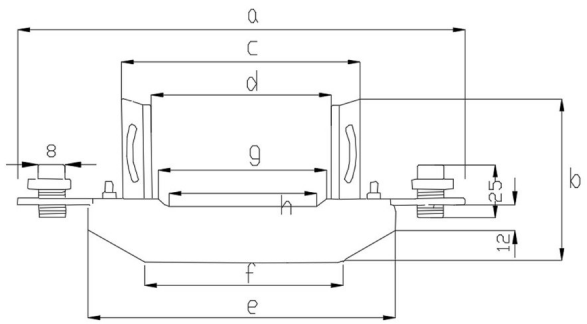

NT 1 · 2 · 3

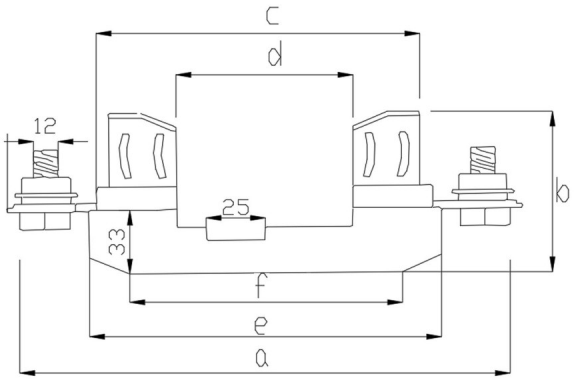

DIMENSIONS A–H AND WEIGHT

Type	a	b	c	d	e	f	g	h	Weight (kg)
NT00	129	60	68	53	89	55	52	45	**0.228**
NT1	200	78	118	78	153	125	—	—	**0.600**
NT2	200	84	136	85	153	125	—	—	**0.790**
NT3	225	93	149	80	153	125	—	—	**0.825**

High-speed **semi-conductor fuse**

03



NH00 – NH3 • 40 – 630 A

Time–current **curve**

Virtual pre-arcing time (s) against r.m.s. prospective current (A), for every rating from 40 A to 630 A.

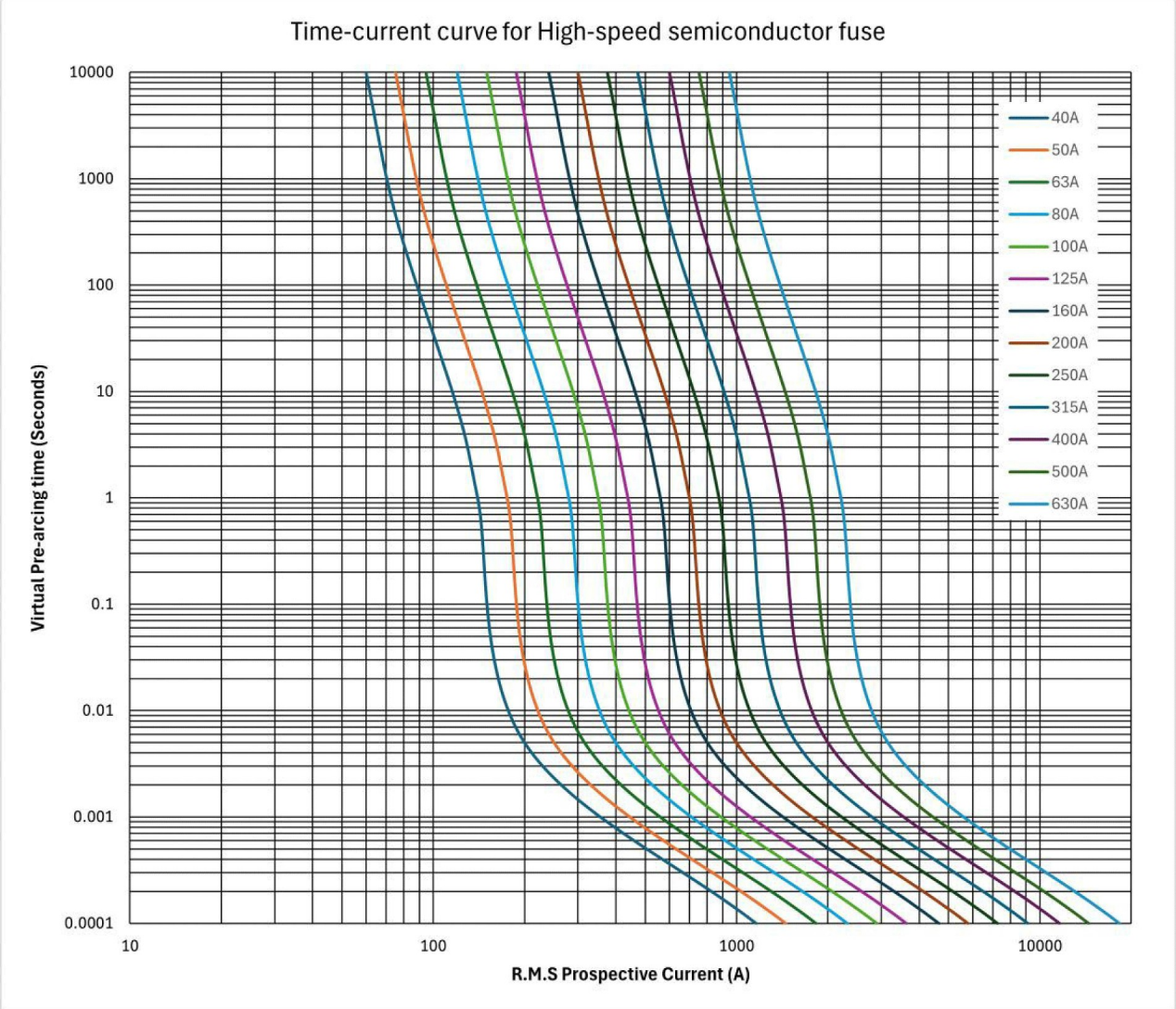

RATINGS	SIZES	CLASS
13 · 40 – 630 A	**NH00 · NH1 · NH2 · NH3**	**gR · 690 V AC**

Sizes & ratings

RATED VOLTAGE	BREAKING CAPACITY	CLASS	STANDARD
690 V AC	120 kA	gR	IEC 60269-4



FUSE LINK SIZE

NH00

40 – 160 A

40A 50A 63A 80A 100A 125A 160A



FUSE LINK SIZE

NH1

63 – 250 A

63A 80A 100A 125A 160A 200A 250A



FUSE LINK SIZE

NH2

200 – 400 A

200A 250A 315A 400A



FUSE LINK SIZE

NH3

315 – 630 A

315A 400A 500A 630A

Overall **dimensions**

All dimensions in mm.

NH00

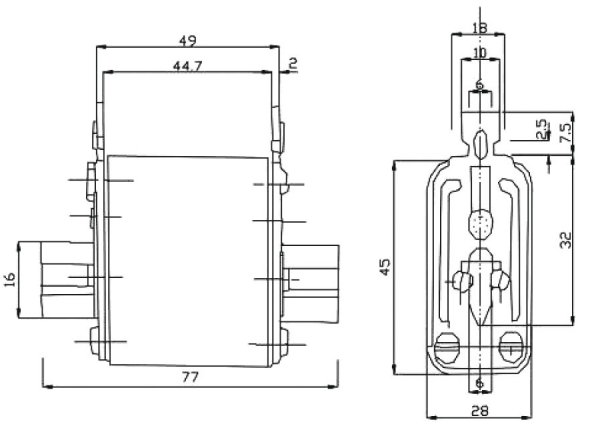

NH 1 · 2 · 3

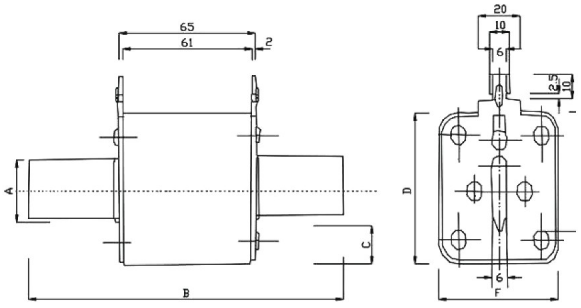

NH 1 · 2 · 3 — DIMENSIONS A–F (MM) AND WEIGHT

Type	A	B	C	D	E	F	Weight (kg)
Size 1	20	135	12	48	38	48	**0.390**
Size 2	25	147.5	14	58	45	58	**0.570**
Size 3	32	147.5	17	66	50	66	**0.760**

Fuse switch disconnector

04

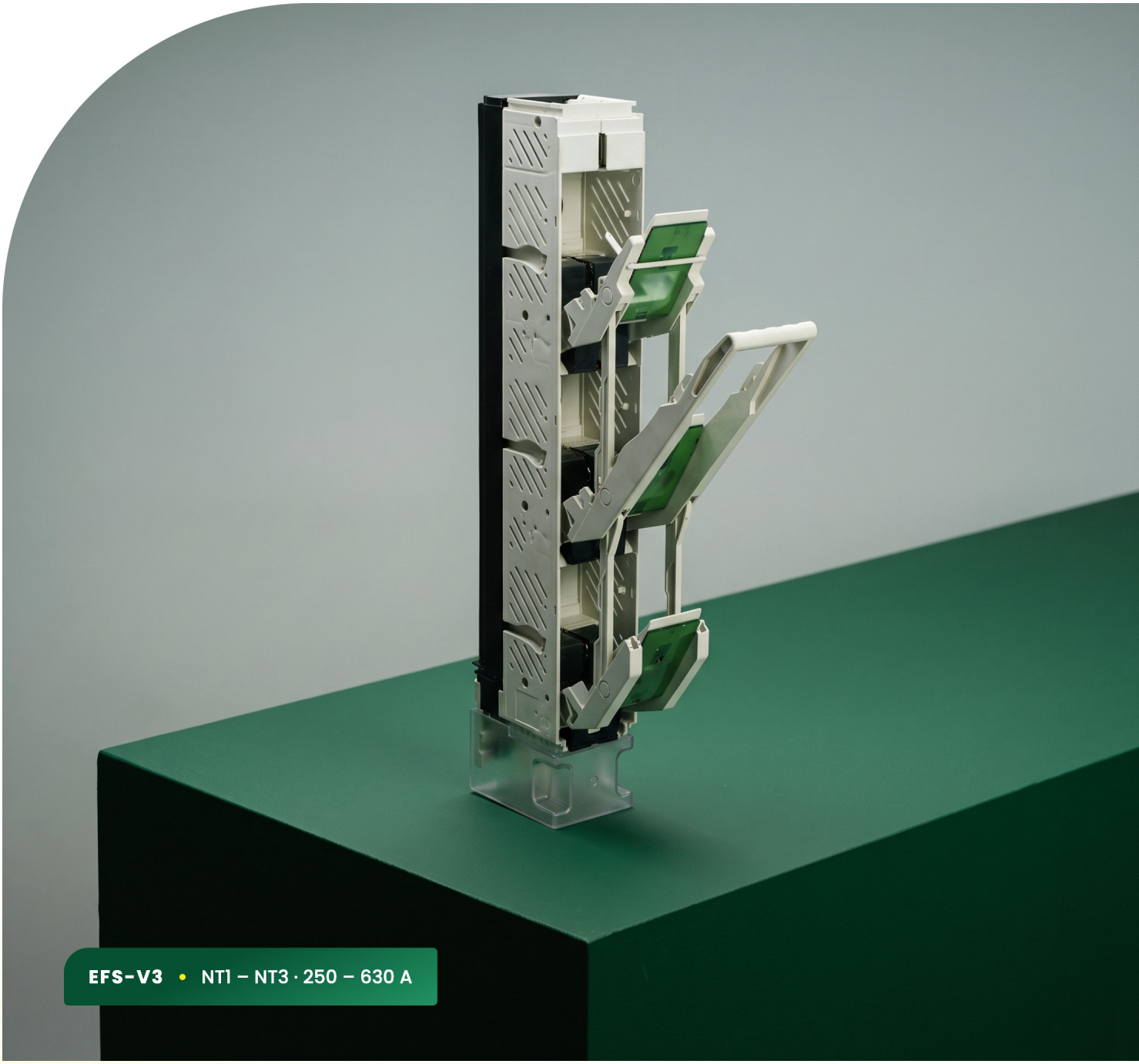

EFS-V3 • NT1 – NT3 · 250 – 630 A

Technical data

EFS-V3/250
250 A
Size NT1 · Power loss 18 W

EFS-V3/400
400 A
Size NT2 · Power loss 28 W

EFS-V3/630
630 A
Size NT3 · Power loss 40 W

SWITCH — RATED OPERATION CURRENT BY VOLTAGE

Ue	Utilization	EFS-V3/250	EFS-V3/400	EFS-V3/630
400 V AC	AC-23B	250 A	400 A	630 A
500 V AC	AC-22B	250 A	400 A	630 A
690 V AC	AC-21B	200 A	315 A	500 A

Thermal current with fuse link (Ith) equals rated operation current (Ie).

COMMON RATINGS

SHORT-CIRCUIT CAPACITY @ 400 V **≥ 50 kA**	PROTECTED SHORT-CIRCUIT MAKING · ICW **120 kA**	RATED ISOLATION VOLTAGE · UI **1000 V**
RATED IMPULSE WITHSTAND · UIMP **12 kV**	FUSE-LINK RATED VOLTAGE · UE **400 V**	FREQUENCY **50/60 Hz**
POLES **3**	PROTECTION ON / OFF **IP20 / IP30**	STANDARD **IEC 60947-1 / -3**

WORKING CONDITIONS

Ambient temperature	**-5 ~ +55 °C**	Working mode	**Continuous**
Operation	**Handle**	Installation	**Vertical**
Altitude	**≤ 2000 m**	Pollution degree	**3**
Overvoltage level	**IV**		

EFS-V3 at a glance



DIMENSIONS · MM

-All dimensions are in mm

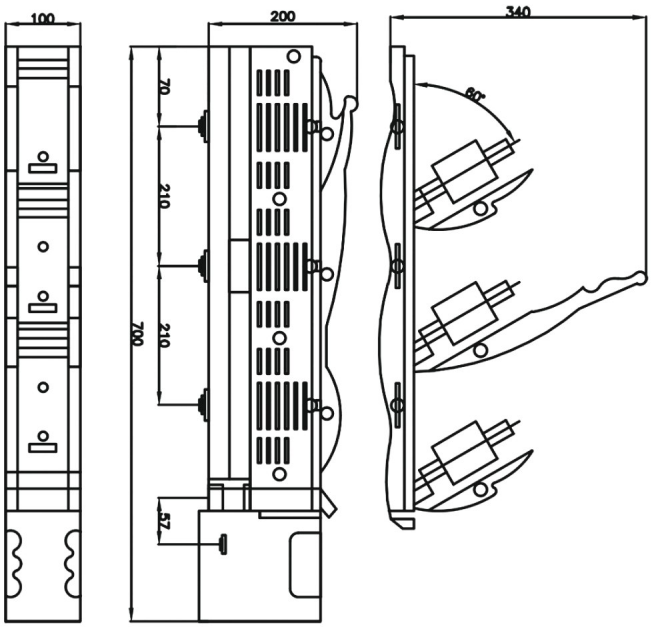

SIZES	WORKING CURRENT
NT1 · NT2 · NT3	250 – 630 A
POLES	**INSTALLATION**
3	Vertical · Handle

MV **Fuse**

Indoor medium-voltage back-up fuse links with striker, to IEC 60282-1. Full technical data available on request.



RATED VOLTAGE	RATED CURRENT	BREAKING I_1	STANDARD
12 · 24 kV	**6.3 – 200 A**	**50 kA**	**IEC 60282-1**

CURRENT RANGE

12 kV 6.3 A → 200 A

24 kV 6.3 A → 200 A

Certifications

Registrations and approvals held by ETAL for Electrical & Mechanical Industries S.A.E.

01



02



03



04



05



06



07



08



Get in touch

MOBILE
+(20) 100 017 5983

TEL. / FAX
+(20) 84-221-6565

TEL. / FAX
+(20) 84-221-6566

EMAIL
info@etal-eg.com

WEBSITE
www.etal-eg.com

FACTORY

Industrial Zone (B), **Kum Ushim, Fayoum**

50 km south of Cairo · 4,000 m² facility

SCAN TO
VISIT US ONLINE

إيتال ETAL

SINCE 2007

Engineering the core of **electrical distribution.**

WEBSITE
www.etal-eg.com

EMAIL
info@etal-eg.com

PHONE
+(20) 84-221-6565

FACTORY
Kum Ushim, Fayoum