Fuse **bases**

All dimensions in mm.









NT00

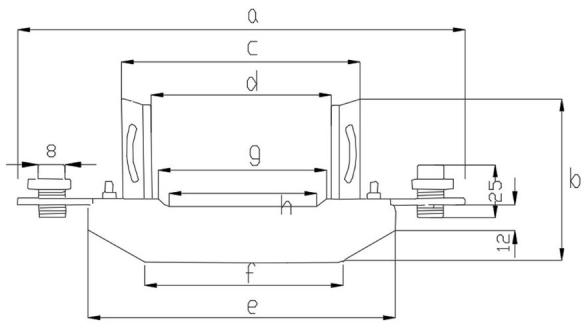

NT 1 · 2 · 3

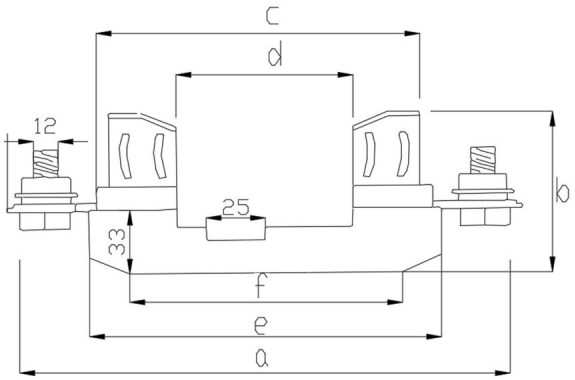

DIMENSIONS A–H AND WEIGHT

Type	a	b	c	d	e	f	g	h	Weight (kg)
NT00	129	60	68	53	89	55	52	45	**0.228**
NT1	200	78	118	78	153	125	—	—	**0.600**
NT2	200	84	136	85	153	125	—	—	**0.790**
NT3	225	93	149	80	153	125	—	—	**0.825**