Fuse links NT

Selection chart for blade-type fuse links.

SIZE	PART NO.	RATING	RATED WATT LOSS (W)	TYPE NT
 **Size 00** Limit (IS 13703): 100 A fuse · 6.5 W	NT00GL 69HR10	10 A	1.1	100, 125, 160
	NT00GL 69HR16	16 A	2.4	100, 125, 160
	NT00GL 69HR20	20 A	2.4	100, 125, 160
	NT00GL 69HR25	25 A	3.2	100, 125, 160
	NT00GL 69HR32	32 A	5	100, 125, 160
	NT00GL 69HR40	40 A	5	100, 125, 160
	NT00GL 69HR50	50 A	5	100, 125, 160
	NT00GL 69HR63	63 A	5.3	100, 125, 160
	NT00GL 69HR80	80 A	6.2	100, 125, 160
	NT00GL 69HR100	100 A	7	100, 125, 160
	NT00GL 69HR125	125 A	8.5	100, 125, 160
	NT00GL 69HR160	160 A	12	100, 125, 160
 **Size 1** Limit (IS 13703): 250 A fuse · 34 W	NT1GL 69HR63	63 A	5.7	100, 125, 160
	NT1GL 69HR80	80 A	8.3	200
	NT1GL 69HR100	100 A	9.1	200, 250, 315
	NT1GL 69HR125	125 A	10.3	200, 250, 315
	NT1GL 69HR160	160 A	12.3	250, 315
	NT1GL 69HR200	200 A	14.3	250, 315
	NT1GL 69HR250	250 A	17.3	250, 315
 **Size 2** Limit (IS 13703): 400 A fuse · 34 W	NT2GL 69HR200	200 A	14.1	400
	NT2GL 69HR250	250 A	16.9	400
	NT2GL 69HR315	315 A	20.2	400
	NT2GL 69HR400	400 A	24.9	400
 **Size 3** Limit (IS 13703): 630 A fuse · 48 W	NT3GL 69HR315	315 A	20.5	630, 800
	NT3GL 69HR400	400 A	26.7	630, 800
	NT3GL 69HR630	630 A	42.2	630, 800
	NT3GL 69HR800	800 A	48	800

GUIDELINES FOR SELECTION

1. Fuse links type NT are suitable for system voltages up to 415 V+.
2. Select the size and rating of fuse link for the switch-disconnector fuse unit as per this selection chart.
3. Ensure the breaking capacity of the fuse link is higher than the prospective fault current.
4. Select fuses so that discrimination is achieved with other protective devices in the system.

Fuse link **dimensions**

All dimensions in mm.









SIZE 00

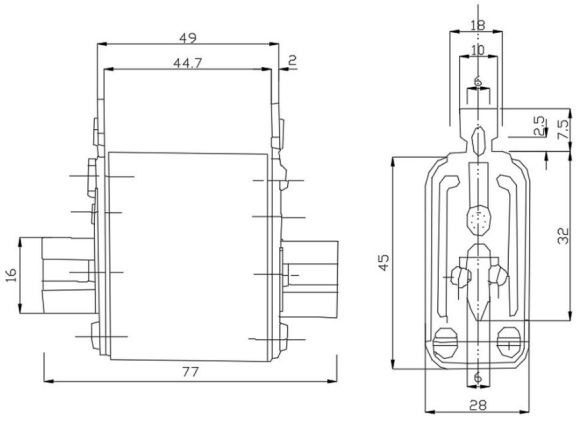

SIZE 1 · 2 · 3

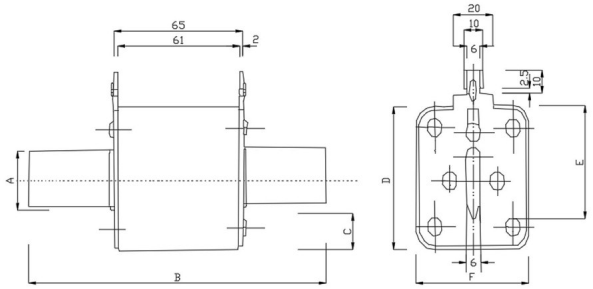

SIZES 1 · 2 · 3 — DIMENSIONS A–F AND WEIGHT

Type	A	B	C	D	E	F	Weight (kg)
Size 1	20	135	12	48	38	48	**0.390**
Size 2	25	147.5	14	58	45	58	**0.570**
Size 3	32	147.5	17	66	50	66	**0.760**

Characteristic **curves**

HRC fuse links type NT.

TIME–CURRENT

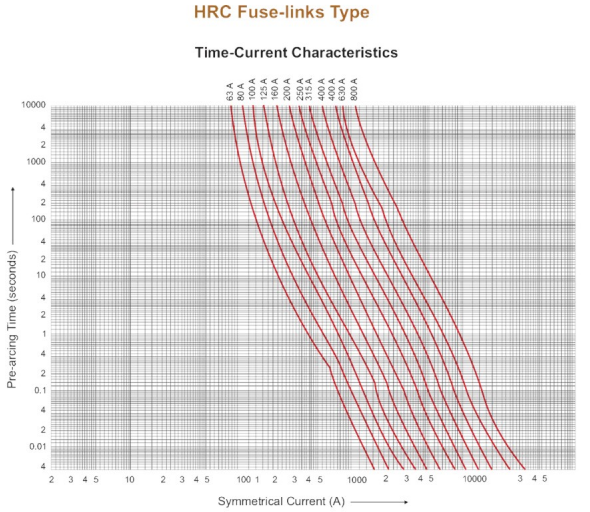

CUT-OFF CURRENT

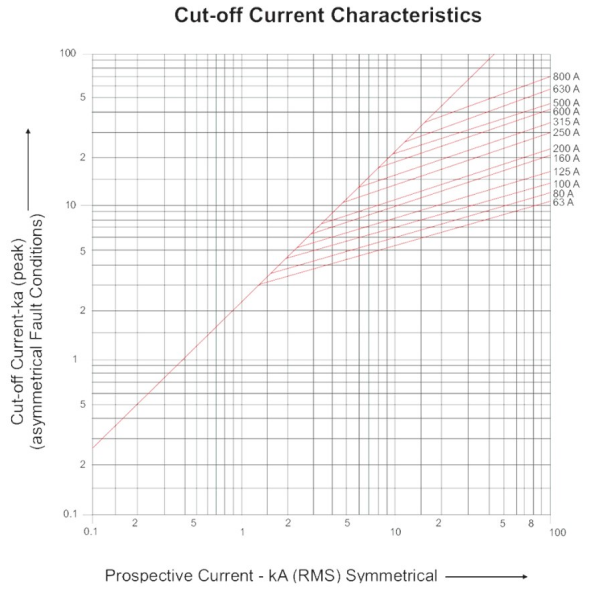

I²T CHARACTERISTICS

